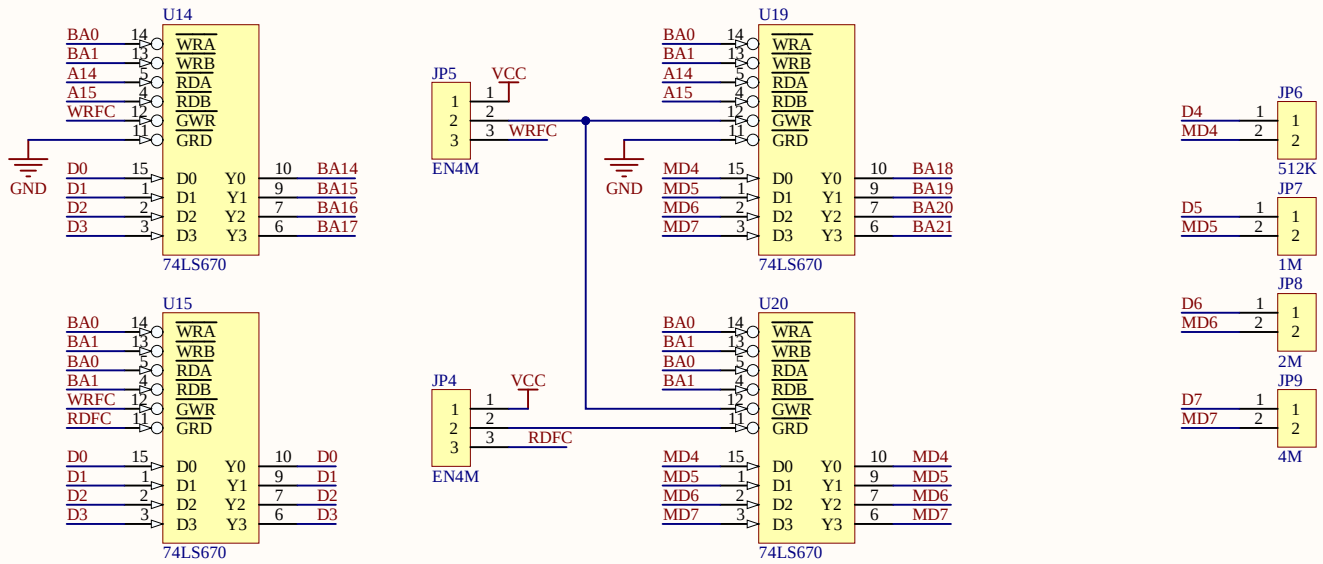

Title	MEMORY MAPPER		
Size A4	Number AC21B24		Revision
Date: 9/06/2022		Sheet of	
File: C:\TangoPlus\..\MAPPER.SchDoc		Drawn By: ADEMIR CARCHANO	