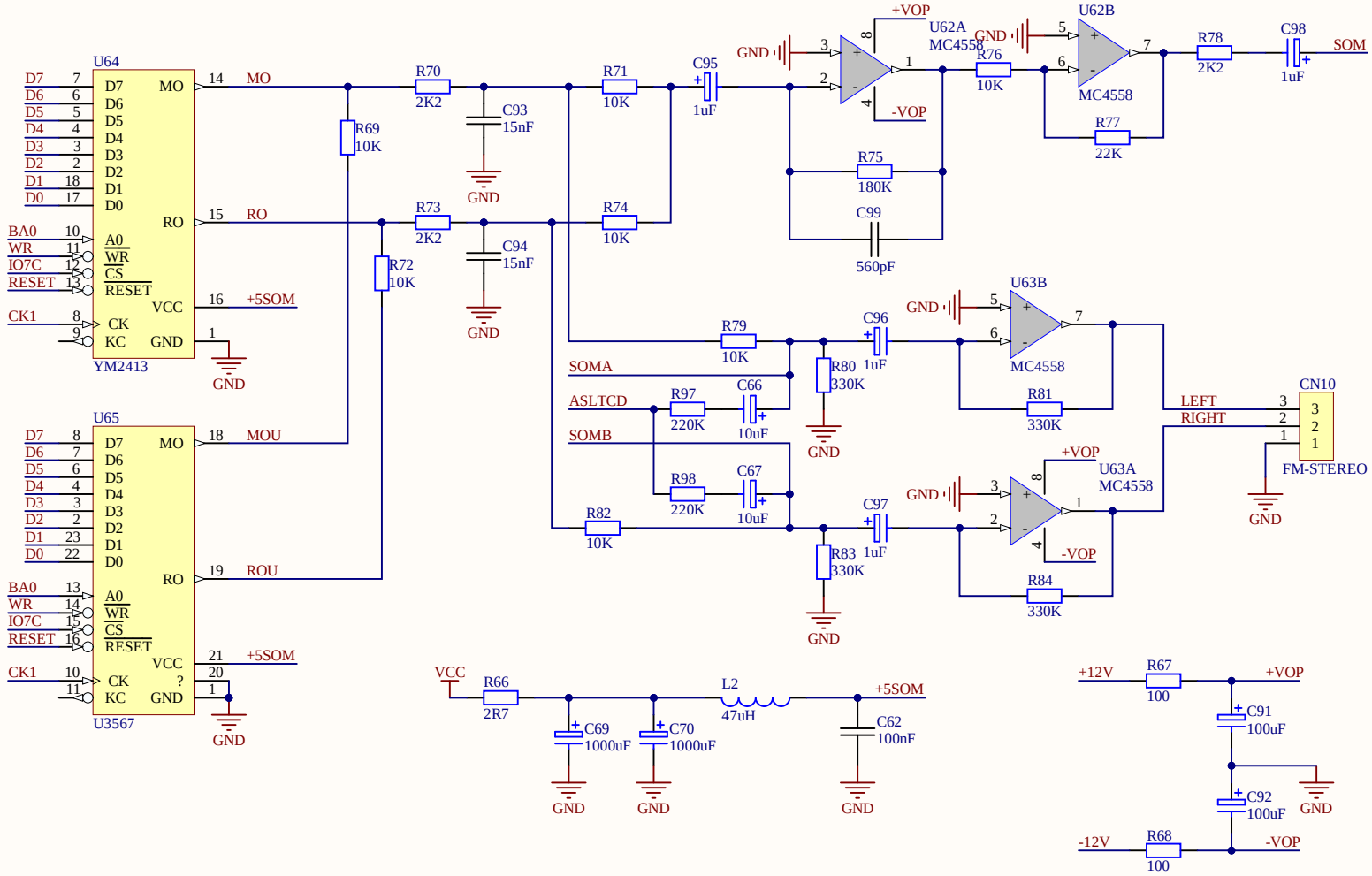

Title	FM		
Size A4	Number AC21B24		Revision
Date: 9/06/2022		Sheet of	
File: C:\TangoPlus\Expert3X\EXPERT4\FM.SchDoc		Drawn By: ADEMIR CARCHANO	